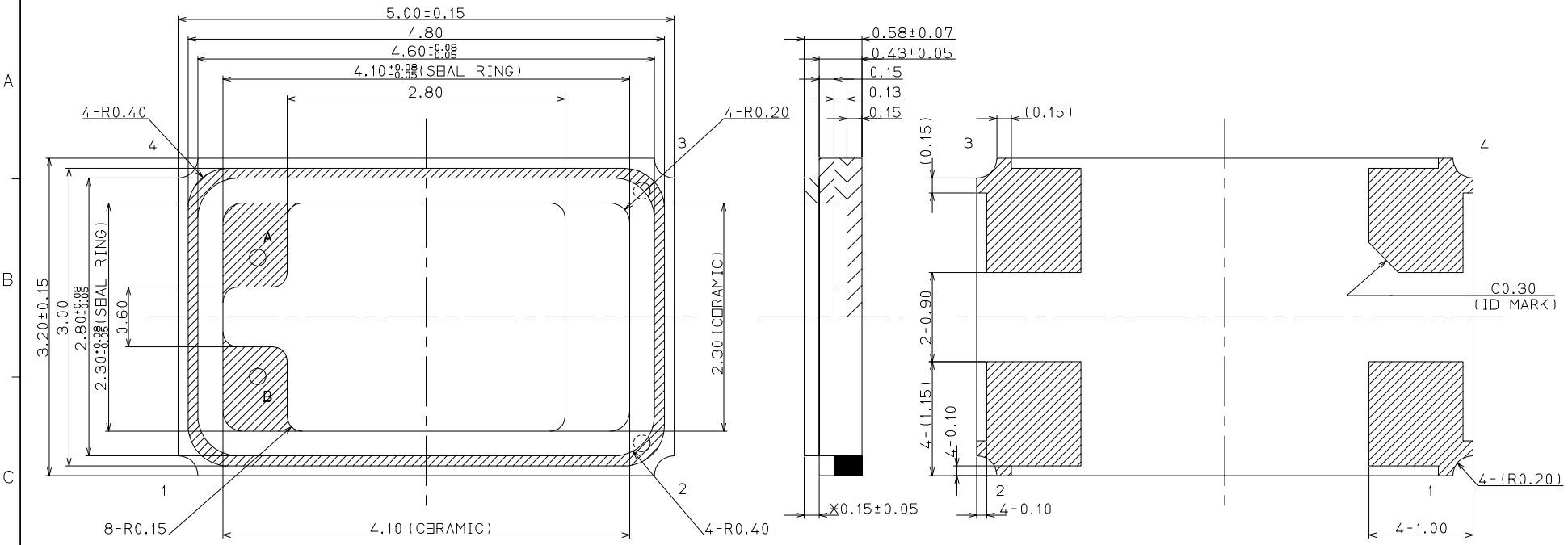

NOTES:

1. GENERAL TOLERANCE : ±1% N.L.T. ±0.13.
2. ELECTRIC Ni PLATING : 1.27~8.89 MICRON.(SOLDER PAD)
   ELECTRIC Au PLATING : 1.00 MICRON MIN.(SOLDER PAD)
3. * MARK TO BE MATERIAL DIMENSION.
4. CONNECTION : (A-4),(B-1),(2-3-S/R)
5. ■ PART TO BE SHOWN AS SIDE METALLIZED PATTERN.
6. SEALING METHOD OF THIS PRODUCT SHALL BE SEAM WELD.

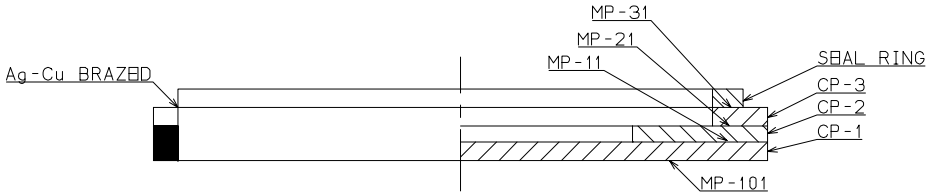

PRELIMINARY

TOLERANCE	REVISION	SEE ATTACHED EXCEPTIONS SHEET.			TITLE
* ±1% N.L.T.±0.13 ANGLES	SCALE 25 : 1	DIMENSION mm	PROJECTION 3rd	CUSTOMER DWG NO. / REV.	5X3.2 PKG
MATERIAL	APPROVED	CHECKED	ENGRG	CHECKED	DESIGNED
90%MIN.Al2O3 (NA-311B BLACK)					PART NO. S5032XTAL1 / REV. 0
					DWG NO. / SHT/OF 1/5

Sumitomo Metal (SMI) Electronics Devices Inc.